Control

The basic control system for a robot manipulator is as follows.

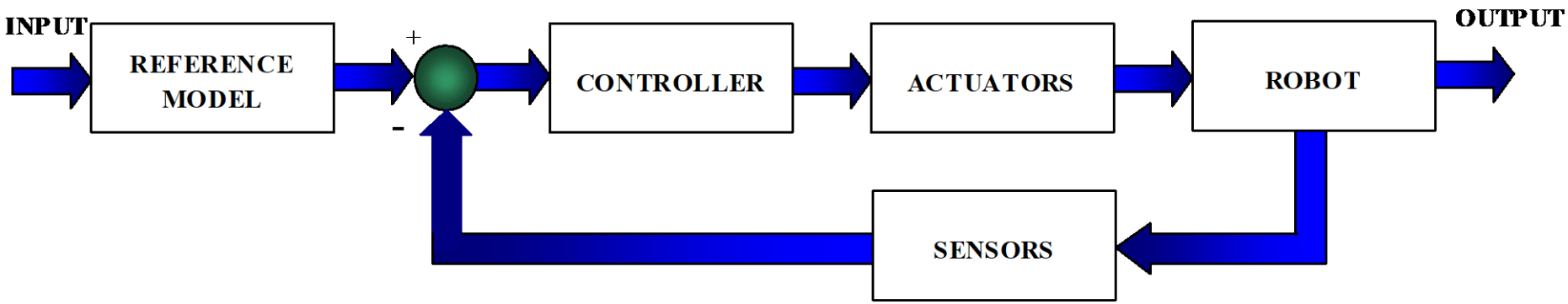

Position Control Scenario

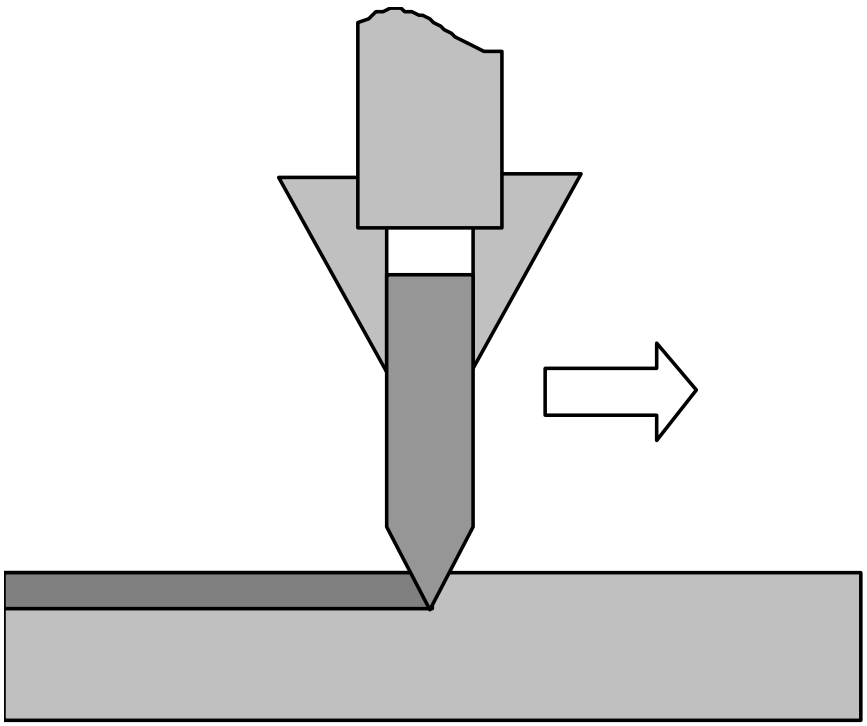

(a) Flat Surface

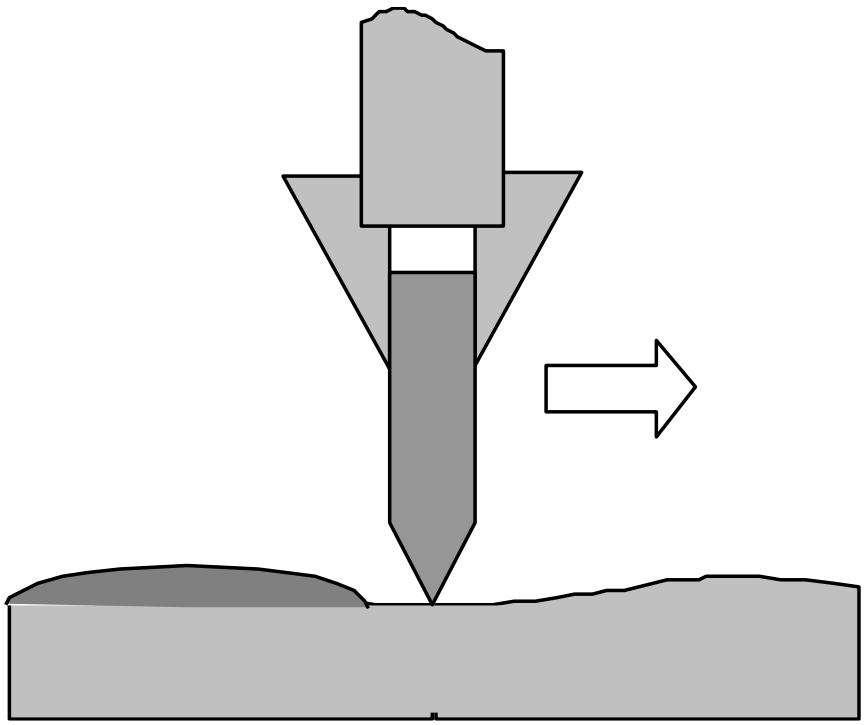

(b) Uneven Surface

Force Control Scenario

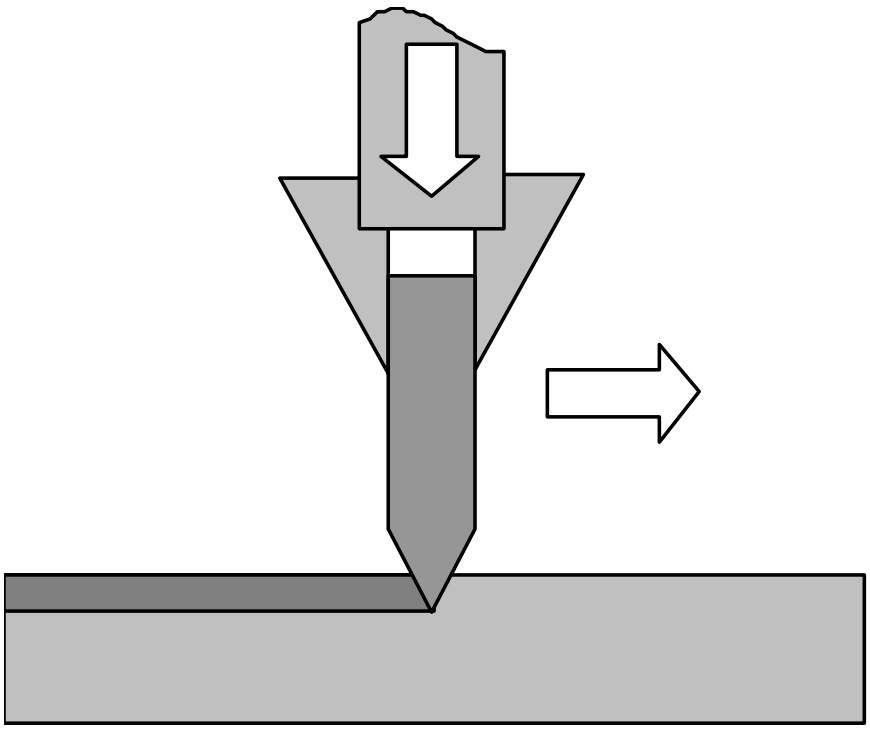

(a) Flat Surface

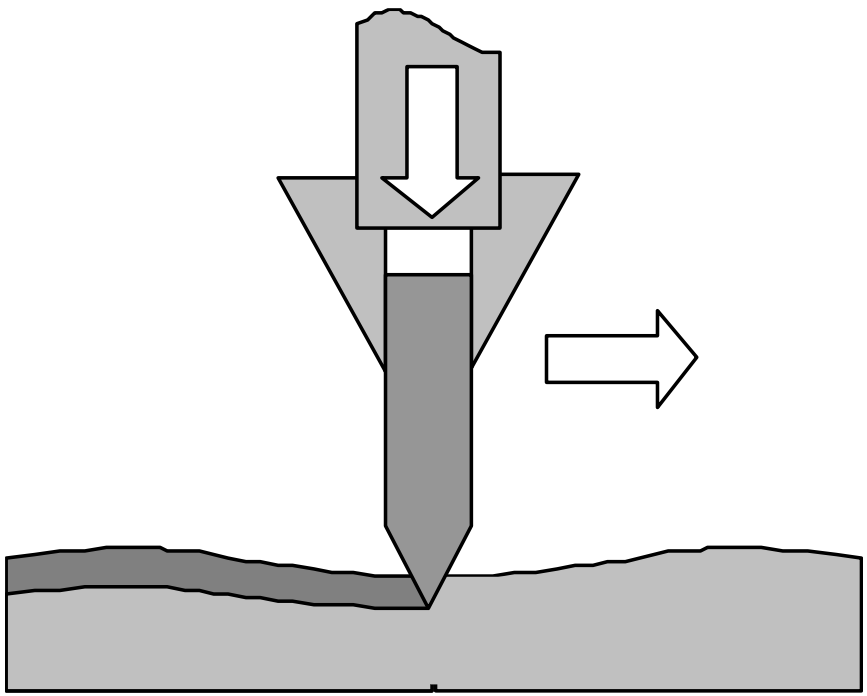

(b) Uneven Surface

Position Control

There are two types of position control

- Joint Space Control – where the control action depends on the joint variables and the end effector position/orientation is controlled indirectly

- Operational Space Control – where the control action depends on the position/orientation of the end effector directly

Joint Space Control

The configuration of the joint space control scheme is:

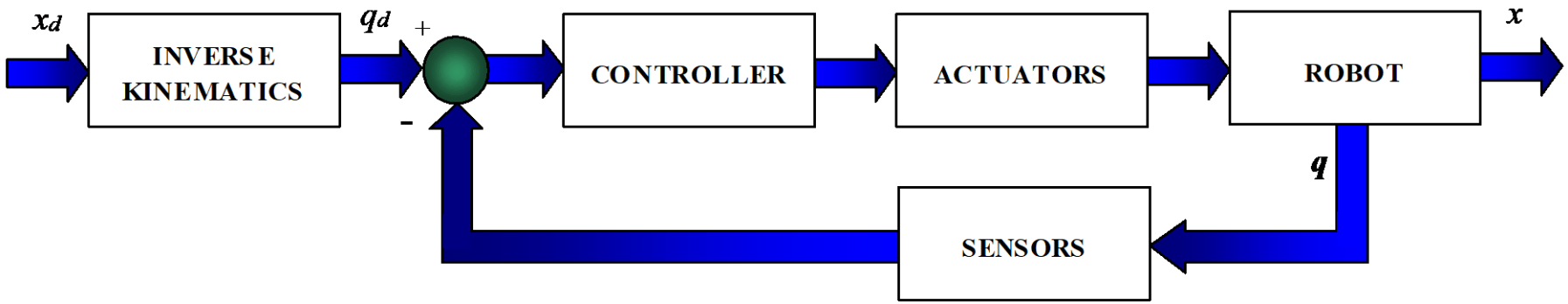

Operational Joint Control

Jacobian Inverse Control Scheme

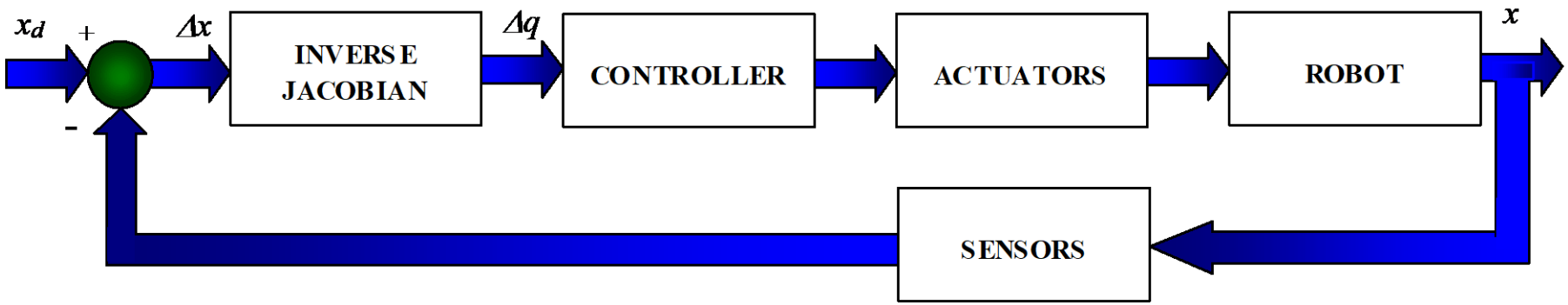

Jacobian Transpose Control Scheme

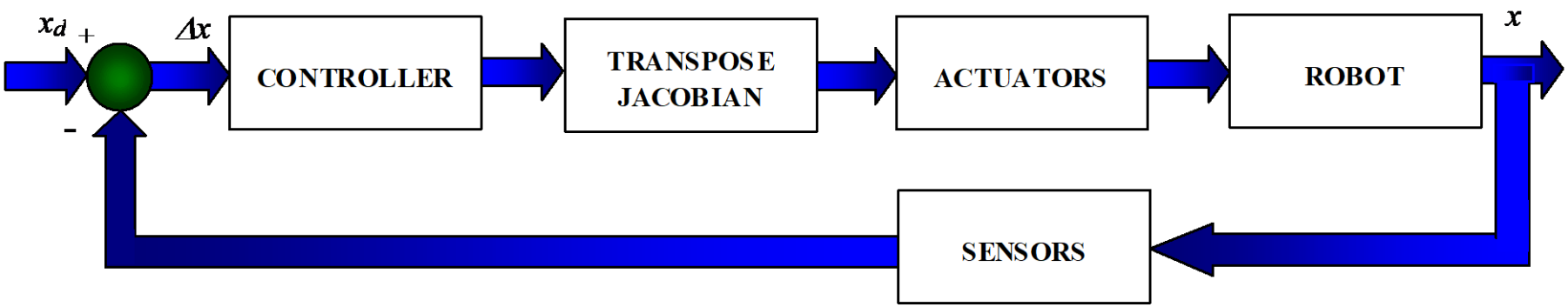

Force Control

The configuration of the force control scheme is:

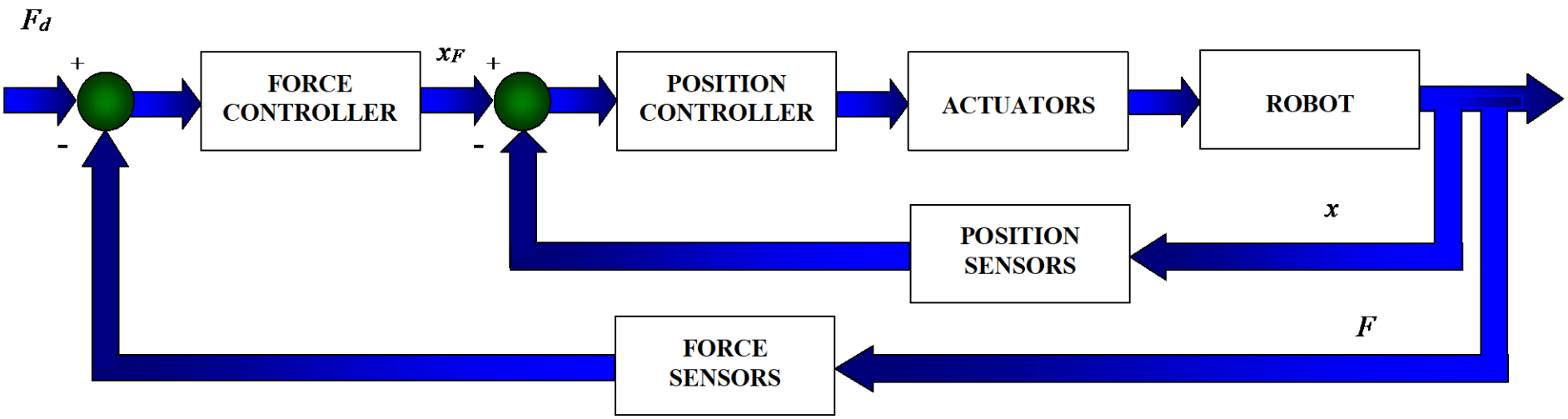

Parallel Force and Position Control

The configuration for the parallel force and position control system is as follows:

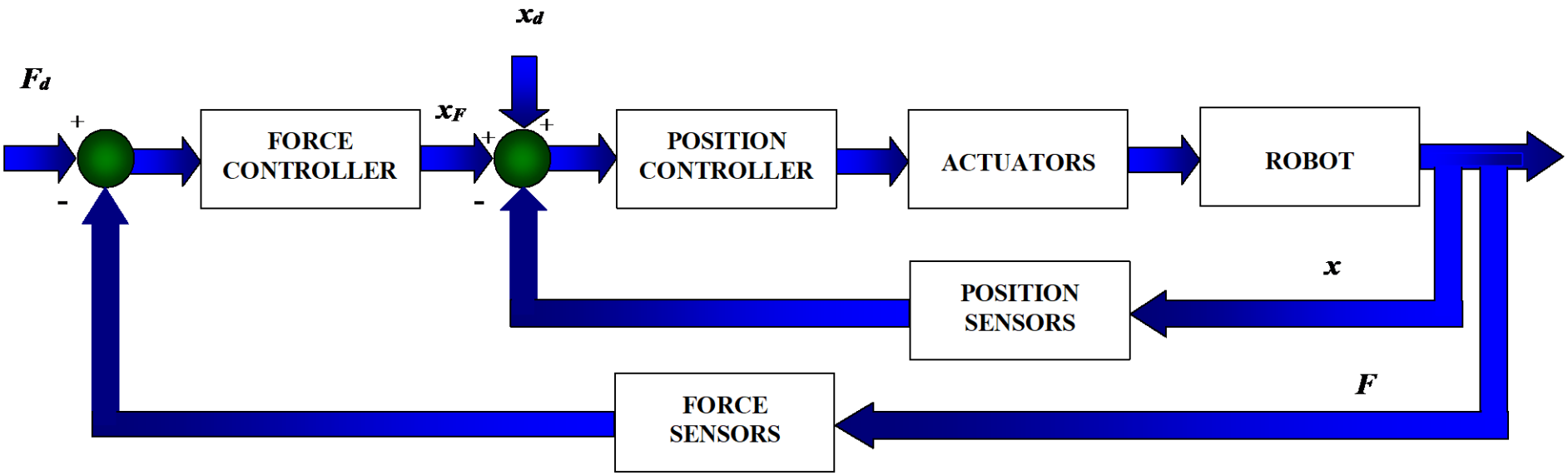

Controller Approaches

There are two approaches to designing control systems for robot manipulators:

- *Independent Joint Control* – every joint has its own control system (decoupled SISO approach)

- *Centralised Control* – all joints controlled by the same control system (integrated MIMO approach)

Controller Constraints

There are two types of constraints that must be considered for every robot manipulator:

- *Natural Constraints* – these are limits on the operation of the manipulator that are imposed by the operational environment

- *Artificial Constraints* – these are limitation imposed by the construction of the manipulator (e.g. joint limits)

The combination of these two groups defines the operational limits for the manipulator i.e. the usable workspace

Controller Architecture
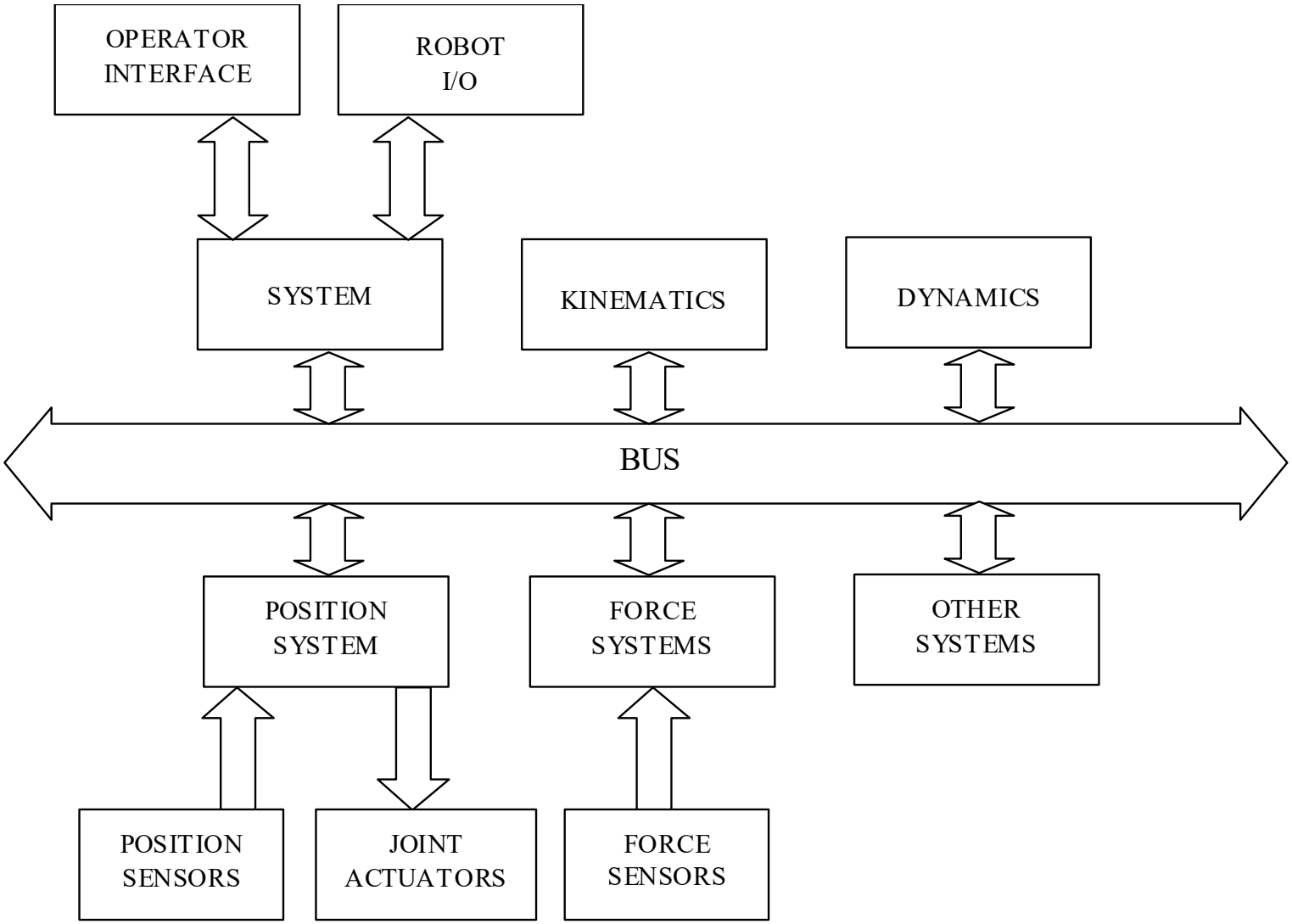
The general controller architecture is as follows: